3. SPOJNI PRIBOR General hardware

3.1. Škopci

RX-lift

Škopac DIN 82101 RX-lift

Shackle according to DIN 82101 RX-lift

2.1 2.2

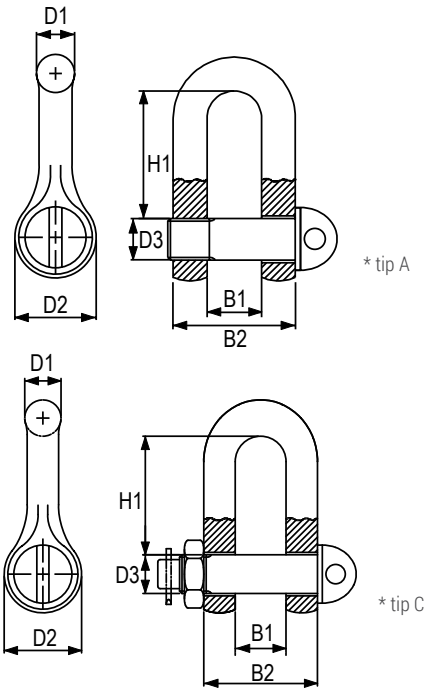



• Faktor sigurnosti: 4:1
• Završna obrada: vruće galvanizovano. ili crni

Nosivost (t) WLL	B1 (mm)	B2 (mm)	D1 (mm)	D2 (mm)	D3 (mm)	H1 (mm)	Težina (kg/100 kom) Weight
0,1	7	15	4	10	M 5	15,5	1,3
0,16	8	18	5	12	M 6	18,0	2,4
0,25	11	25	7	16	M 8	24,0	4,5
0,4	14	30	8	20	M 10	30,0	8,2
0,6	17	37	10	24	M 12	36,0	17,3
1,0	21	47	13	32	M 16	49,0	36,0
1,6	27	61	17	40	M 20	61,0	75,0
2,0	30	68	19	44	M 22	67,0	103,0
2,5	33	75	21	48	M 24	73,0	143,0
3,0	38	86	24	54	M 27	83,5	211,0
4,0	42	96	27	60	M 30	91,0	289,0
5,0	47	107	30	72	M 36	111,0	390,0
6,0	53	121	34	78	M 39	119,5	502,0
8,0	60	136	38	90	M 45	139,5	675,0
10,0	66	150	42	96	M 48	147,0	976,0
12,0	73	167	47	104	M 52	158,0	1310,0
16,0	81	185	52	120	M 60	185,0	1770,0
20,0	90	206	58	136	M 68	211,0	2380,0
25,0	100	226	63	144	M 72	221,0	3270,0
32,0	110	250	70	160	M 80	246,0	4950,0
40,0	125	283	79	180	M 90	276,0	6900,0
56,0	140	316	88	200	M 100	307,0	9460,0
63,0	155	347	96	220	M 110	339,0	12500,0