2. PRIBOR G80 I G100 G80 and G100 accessories

2.1. Pribor G80

Okretni vijak s alkom G80 RX303

Lifting point G80

2.1 2.2 CE

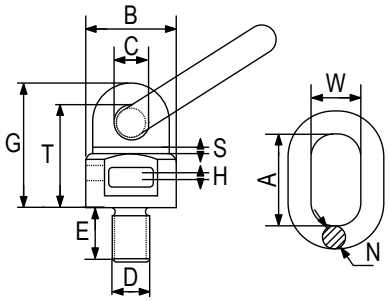





Veličina (mm)	Nosivost (t) na 90°	Nosivost (t) na 0°	D×E (mm)	B (mm)	C (mm)	G (mm)	T (mm)	A (mm)	W (mm)	N (mm)	H (mm)	S (mm)	Težina (kg/kom)
Item No.	WLL 90°	WLL 0°											Weight
M8	0.3	0.6	M8X13	36	16.5	51	41	55	30	14	3	1	0.41
M10	0.5	0.9	M10×18	36	16.5	51	41	55	30	14	3	1	0.43
M10X90	0.5	1.0	M10X90	36	16.5	51	41	55	30	14	3	1	0.38
M12	0.5	1.0	M12×18	36	16.5	51	41	55	30	14	3	1	0.44
M12×40	0.5	1.0	M12×40	36	16.5	51	41	55	30	14	3	1	0.52
M12×45	0.5	1.0	M12×45	36	16.5	51	41	55	30	14	3	1	0.47
M12×110	0.5	1.0	M12×110	36	16.5	51	41	55	30	14	3	1	0.53
M14	1.12	2.0	M14X20	36	16.5	51	41	55	30	14	3	1	0.45
M16	1.12	2.0	M16X35	36	16.5	52	42	55	30	14	3	1	0.46
M16X40	1.12	2.0	M16X40	36	16.5	52	42	55	30	14	3	1	0.48
M16X100	1.12	2.0	M16X100	36	16.5	52	42	55	30	14	3	1	0.54
M16X120	1.12	2.0	M16X120	36	16.5	52	42	55	30	14	3.5	1	0.6
M20	2	4	M20X30	49.5	19	68	56	70	35	16	3.5	1	0.96
M20X120	2	4	M20X120	49.5	19	68	56	70	35	16	3.5	1	1.17
M24	3.15	6.3	M24X40	57	22	78	65.5	85	40	18	3.5	1.5	1.45
M24X40	3.15	6.3	M24×90	57	22	78	65.5	85	40	18	3.5	1.5	1.42
M24X90	3.15	6.3	M24×90	57	22	78	65.5	85	40	18	3.5	1.5	1.66
M24X120	3.15	6.3	M24X120	57	22	78	65.5	85	40	18	3.5	1.5	1.74
M27	3.15	6.3	M27X35	57	22	78	65.5	85	40	20	3.5	1.5	1.47
M30(5T)	5.3	10.6	M30X35	66	23.5	96.5	80.5	85	40	20	4	1.5	2.17
M30×38	5.3	10.6	M30X38	66	23.5	96.5	80.5	85	40	20	4	1.5	2.18
M30×120	5.3	10.6	M30X120	66	23.5	96.5	80.5	85	40	22	4	1.5	2.65
M30(8T)	8	11.8	M30X35	80	28	112	92	115	50	22	6	2	3.57
M30×38	8	11.8	M30X38	80	28	112	92	115	50	22	6	2	3.58
M30×120	8	11.8	M30×120	80	28	112	92	115	50	22	6	2	4.01
M36×90	8	11.8	M36X90	80	27	109	89.5	115	50	22	6	2	4.17
M36×400	8	11.8	M36×400	80	27	109	89.5	115	50	22	6	2	6.41
M39	8	11.8	M39×50	80	27	109	89.5	115	50	22	6	2	3.65
M39×90	8	11.8	M39X90	80	27	109	89.5	115	50	22	6	2	3.71
M42	10	15	M42X50	80	27	109	89.5	115	50	25	6	2.5	3.62
M42X60	10	15	M42X60	80	27	109	89.5	115	50	25	6	2.5	3.72
M42X130	10	15	M42X130	80	27	109	89.5	115	50	25	6	2.5	4.46
M42X180	10	15	M42X180	80	27	109	89.5	115	50	25	6	2.5	5.0
M45X60	10	15	M45X60	80	27	109	89.5	115	50	25	6	2.5	4.17
M48	10	15	M45X50	80	27	109	89.5	115	50	25	6	2.5	4.02
M48X110	10	15	M48X110	80	27	109	89.5	115	50	25	6	2.5	4.8
M56X84	15	25	M56X84	117	42	310	280	152	70	32	7	2.5	11.6
M64X95	15	25	M64X95	117	42	310	280	152	70	32	7	2.5	12.4