# 6. EL. DIZALICE, VITLA I VILJUŠKARI El. hoists, forklifts

## 6.1. Električne dizalice i vitla

### Dizalica viseća jednogredna tip SH6 2/1 sa kolicima RX-lift

**Electric standard headroom travelling hoist type SH6 2/1 RX-lift**

2.1 2.2 CE MTCa

| Tip<br>Type | Kapacitet (t)<br>Capacity | Klasifikacija<br>Classification | Broj namotaja<br>Rope reeving | Brzina dizanja (m/min)<br>Lifting speed | Motor (kW)<br>Lifting motor | Brzina puta (m/min)<br>Traveling speed | Motor kolica (kW)<br>Traveling motor | L2 brzine (mm)<br>L2 speed | Za profil "C" (mm) I (mm)<br>Suitable for rail C | Za profil "C" (mm) H (mm)<br>Suitable for rail C | L3 (mm) | L5 (mm) | L4 (mm) | H1 (mm) | H min (mm) | S (mm) |
|---|---|---|---|---|---|---|---|---|---|---|---|---|---|---|---|---|
| SH3B | 1 | M4 | 2/1 | 8,4 | 1,5 | 20 | 0,37 | 300 | 110-180 | 180-420 | 138 | 375 | 282 | 121 | 979 | 0,0161H |
| | | | | 8,4/2,1 | 1,5/0,4 | 20/5 | 0,37/0,12 | 500 | | | | | | | | |
| SH4B | 2 | M4 | 2/1 | 7,2 | 3 | 20 | 0,37 | 350 | 110-180 | 180-420 | 147 | 375 | 282 | 121 | 1153 | 0,0174H |
| | | | | 7,2/2,4 | 3/1 | 20/5 | 0,37/0,12 | 535 | | | | | | | | |
| SH5B | 3,2 | M4 | 2/1 | 7 | 4,5 | 20 | 0,37 | 380 | 110-180 | 180-420 | 161 | 375 | 282 | 121 | 1249 | 0,0182H |
| | | | | 7/1,6 | 4,5/1,1 | 20/5 | 0,37/0,12 | 600 | | | | | | | | |
| SH6B | 5 | M4 | 2/1 | 7,6 | 7,5 | 20 | 0,37 | 460 | 130-180 | 180-420 | 194 | 429 | 278 | 151 | 1361 | 0,0191H |
| | | | | 7,6/1,8 | 7,5/2,0 | 20/5 | 0,37/0,12 | 645 | | | | | | | | |
| SH7B | 8 | M4 | 2/1 | 8 | 13 | 20 | 0,37 | 520 | 140-180 | 180-450 | 211 | 434 | 308 | 179 | 1516 | 0,0194H |
| | | | | 8/2 | 13/3,4 | 20/5 | 0,37/0,12 | 620 | | | | | | | | |
| SH8B | 10 | M4 | 2/1 | 4 | 13 | 20 | 0,37 | 520 | 140-180 | 180-450 | 211 | 434 | 308 | 179 | 1516 | 0,0194H |
| | | | | 4/1 | 13/3,4 | 20/5 | 0,37/0,12 | 520 | | | | | | | | |

| Kapacitet (t)<br>Capacity | Visina dizanja H9m (mm)<br>Lift. height | Visina dizanja H12m (mm)<br>Lift. height | Visina dizanja H18m (mm)<br>Lift. height | Visina dizanja H24m (mm)<br>Lift. height | Visina dizanja H30m (mm)<br>Lift. height | Veličina (mm)<br>Size |
|---|---|---|---|---|---|---|
| 1 | 479 | 576 | 770 | 964 | 1158 | L0 |
| | 681 | 778 | 972 | 1166 | 1360 | L1 |
| | 137 | 137 | 137 | 137 | 137 | D |
| 2 | 562 | 716 | 924 | 1132 | 1340 | L0 |
| | 771 | 925 | 1133 | 1341 | 1549 | L1 |
| | 182 | 232 | 232 | 232 | 232 | D |
| 3,2 | 598 | 757 | 975 | 1193 | 1411 | L0 |
| | 827 | 986 | 1204 | 1422 | 1640 | L1 |
| | 198 | 248 | 248 | 248 | 248 | D |
| 5 | 638 | 832 | 1061 | 1290 | 1519 | L0 |
| | 907 | 1101 | 1330 | 1559 | 1788 | L1 |
| | 210 | 290 | 290 | 290 | 290 | D |
| 8 | 689 | 885 | 1118 | 1351 | 1584 | L0 |
| | 1005 | 1201 | 1434 | 1667 | 1900 | L1 |
| | 243 | 323 | 323 | 323 | 323 | D |
| | 689 | 885 | 1118 | 1351 | 1584 | L0 |
| | 1005 | 1201 | 1434 | 1667 | 1900 | L1 |
| | 243 | 323 | 323 | 323 | 323 | D |

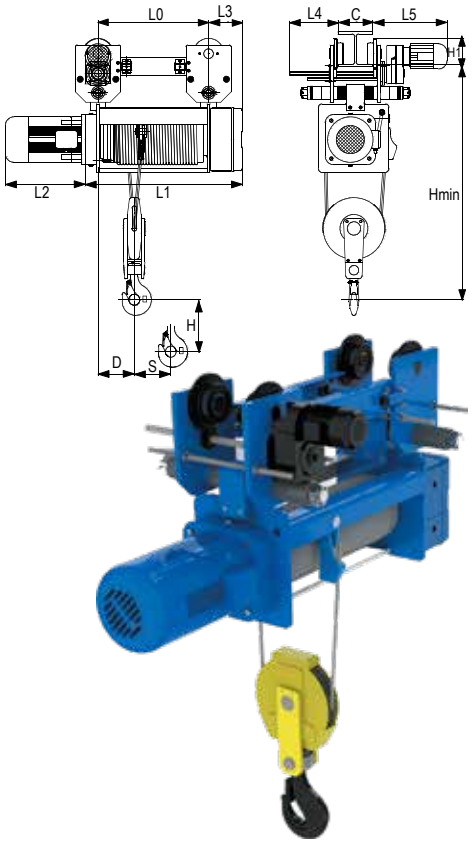


Mogućnosti SH dizalice

El. hoist features

| | | | | | | | |
|---|---|---|---|---|---|---|---|
|  | Kontrolni upravljač |  | * opciono<br>Radiokontrola |  | * opciono<br>Elektronska vaga |  | * opciono<br>Krajnji prekidač |
|  | * opciono<br>Konektori za teže uslove |  | * opciono<br>Limitator položaja |  | Planetarni prenosnik zupčanika |  | Vodilica čeličnog užeta |